SiRFstarIII™ GPS Single Chip

A High Performance GPS in a Small Form Factor

SiRF Chips and Software

ARCHITECTURE HIGHLIGHTS

Next Generation GPS Performance

- High sensitivity for indoor fixes
- Extremely fast TTFF's at low signal levels
- Real time navigation for location based services
- Low 100ms interrupt load on microprocessor for easy IP implementation

SiRFLoc™ Client AGPS Support

- SiRF's Patented End to End Solution
- Multi-mode: from Autonomous to Network Centric
- Supports AI3 and F Interfaces
- Mutli-Standard Support: GSM, 3G, CDMA, PDC, iDen, GPRS, Edge, TIA-916

GSW3 - Modular Software Support

- API compatible with GSW2
- RTOS Friendly

FAMILY HIGHLIGHTS

GSC3 - Digital and RF

- 200,000+ effective correlators for fast TTFF and high sensitivity acquisition
- 20-Channel GPS
- Digital and RF in a single package
- Small 7mm x 10mm BGA package
- 4Mb integrated FLASH memory (GSC3f Only)
- ARM7TDMI CPU to enable user tasks
- Accepts 7 reference frequencies between 13MHz and 33MHz
- Requires mininum external RF components
- Extensive GPS receiver peripherals
  2 UARTS, high speed serial bus, battery backed SRAM, 14 GPIO's

Built on Proven Experience

- IP Integration Experience
- Production support tools
- Supports FCC E911 Mandate

SiRFstarIII ARCHITECTURE

Wireless and handheld applications make rigorous demands on GPS; receivers are pushed to get fixes in places never before expected and in times measure in only seconds. SiRF Technology has risen to the challenge with the SiRFstarIII. This is GPS based on three generations of experience. This experience includes getting customers from design to production in the shortest time, developing IP solutions based on production worthy silicon, and creating a GPS single chip that goes far beyond the FCC's E911 mandate.

The SiRFstarIII has the performance required to meet the industry's toughest challenges. The 200,000+ effective correlators allow the SiRFstarIII to acquire in only seconds even in low signal levels. As part of SiRF's patented multi-mode GPS the SiRFstarIII can acquire signal levels as low as -159dBm. The SiRFstarIII supports real-time navigation in urban canyons as well as high sensitivity acquisition needed for indoor environments. With power management and low power consumption, the SiRFstarIII can get a fix in a fraction of a joule.

SiRFstarIII BLOCK DIAGRAM

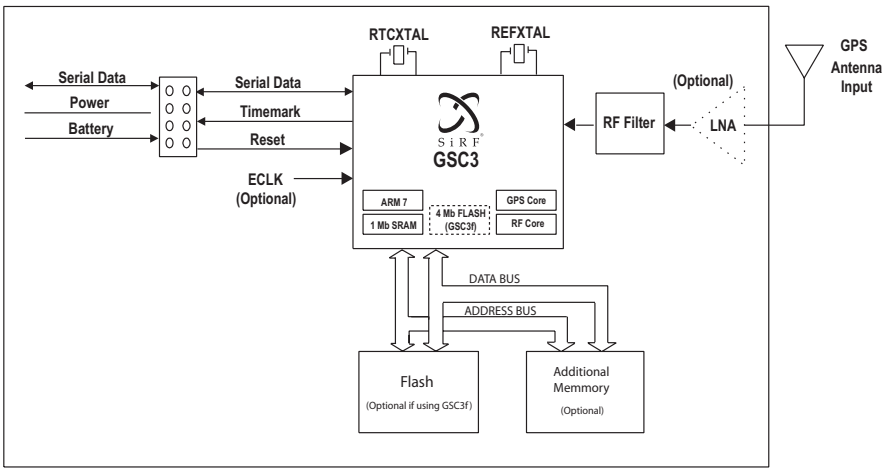

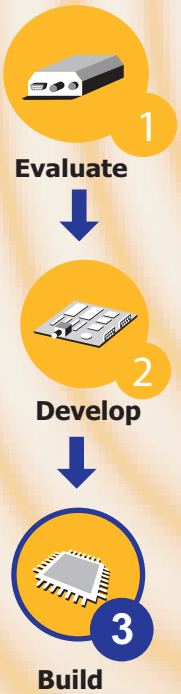

TECHNICAL SPECIFICATIONS

Acquisition at low signal levels		
Aiding Type	**Sensitivity**	**TTFF**
GSM or 3G	Open Sky[1]	< 1s
GSM or 3G	Indoor[2]	< 24s
CDMA	Open Sky	< 1s
CDMA	Indoor	< 18s
Hot Start	Open Sky	< 1s
Hot Start	Indoor	< 15s
Cold Start[3]	Open Sky	< 35s
Tracking Sensitivity	-159dBm	

Position Accuracy	
Autonomous	<10m
SBAS	<5m

Receiver	
Tracking	L1, CA code
Channels	12
Max. Update Rate	10Hz
Max. Altitude/ Velocity	<60,000ft / <1,000 knots
Protocol Support	NMEA, SiRF Binary, AI3/F
Reference Frequencies	13, 16.369, 16.8, 19.2, 24.5535, 26, 33.6MHz

Processing Core	
Processor Type	ARM7TDMI
Data Bus	16 Bit
Ports	14 GPIO
Integrated SRAM	1Mb
Integrated Flash	4 Mb (GSC3f only)

Power	
Core Voltage	1.5V
IO Voltage	2.7-3.0V
Tracking[4] (1s update)	105mW
Open Sky Fix (Aided)	<100mJ

1: Open Sky: All SV at -144dBm or higher.
2: Indoor: 7 SV at -155dBm with one at -147dBm to approximate real environment.
3: SiRFstarIII is capable of cold starts down to -144dBm.
4 Chip power consumpiton using 300, 1 duty cycle.

APPLICATIONS

Wireless market requirements are pushing GPS to new levels of performance benefiting all GPS markets. Consumer applications will be able to exploit the SiRFstarIII's high sensitivity by using very small (high-loss) antennas while still maintaining high-performance. PDA applications can take advantage of the single package by adding GPS to the PDA motherboard in a fraction of the board space required previously. Wireless markets will use SiRFstarIII with aiding for fast fixes even indoors. The SiRFstarIII will usher in a new generation of smaller higher performing GPS products.

CHIP CONFIGURATIONS

AVAILABLE PACKAGES

Chip Name	Chip PN	Package
SiRFstarIII GSC3	GSC3-7871	BGA, 7mm x 10mm
SiRFstarIII GSC3	GSC3-7875	BGA, 7mm x 10mm lead-free
SiRFstarIII GSC3f	GSC3-7877	BGA, 7mm x 10mm
SiRFstarIII GSC3f	GSC3-7879	BGA, 7mm x 10mm lead-free

For more information, contact your SiRF representative, call our sales force on +1 (408) 467-0410, or visit us at www.sirf.com.

WORLDWIDE SALES OFFICES

SiRF California
+1 (408) 467-0410
SalesAmericas@sirf.com

SiRF France
+33 3 82 86 04 15
SalesFrance@sirf.com

SiRF United Kingdom
+44 1344 668390
SalesUK@sirf.com

SiRF Europe
+49 81 529932-90
SalesGermany@sirf.com

SiRF Japan
+81 44829-2186
SalesJapan@sirf.com

SiRF Taiwan
+886 2 2723 7853
SalesAsiaPacific@sirf.com

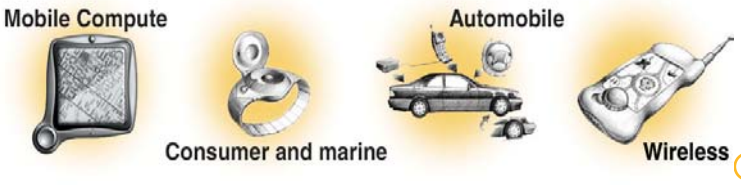

SiRF's technology is protected by U.S. and foreign patents pending and issued. SiRF and the SiRF logo are registered trademarks of SiRF Technology, Inc. SiRFstar, SiRF Powered, SnapLock, Foliage Lock, TricklePower, SingleSat, SiRFLoc, SiRFDRive, SnapStart, Push-to-Fix, SiRFNav, SiRFWare and WinSiRF are trademarks of SiRF Technology, Inc. Other trademarks are property of respective companies.

November 2004
Rev. Preliminary